MATERIAL NUMBER	ENGINEERING NUMBER	CARRIER	DIMENSION "A"	DIMENSION "B"
197054003	19705-4003	STRIP	.560/14.22	.250/6.35
197054103	19705-4103	STRIP	.560/14.22	.187/4.75
197054203	19705-4203	STRIP	.405/10.29	.250/6.35
197054001	19705-4001	LOOSE	.560/14.22	.250/6.35
197054101	19705-4101	LOOSE	.560/14.22	.187/4.75
197054201	19705-4201	LOOSE	.405/10.29	.250/6.35

PCB HOLE LAYOUT

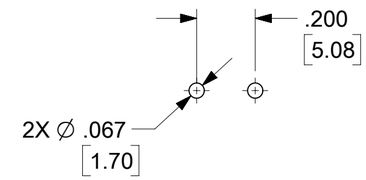

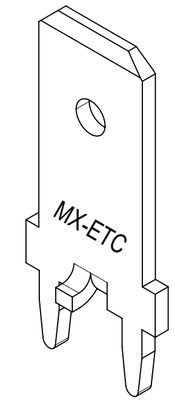

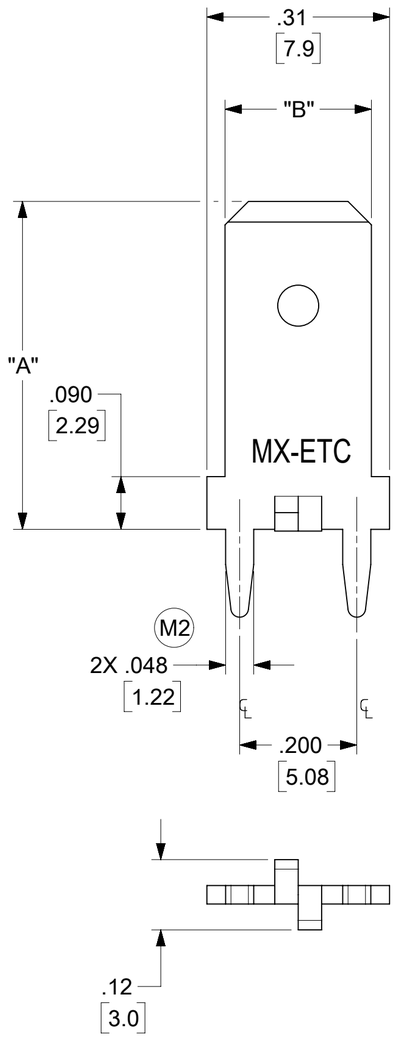

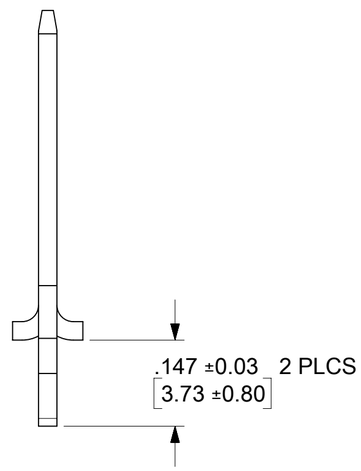

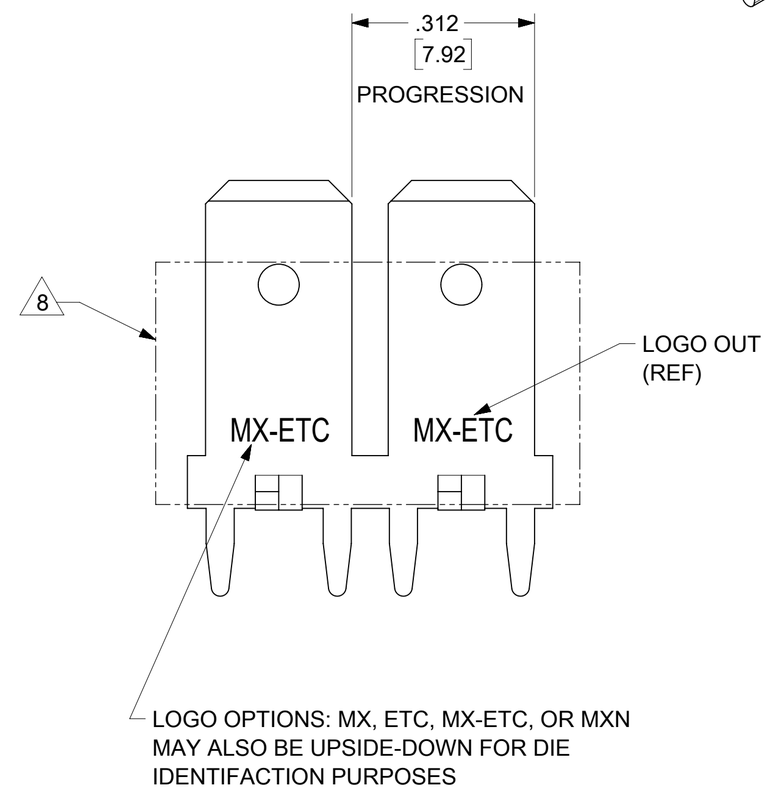

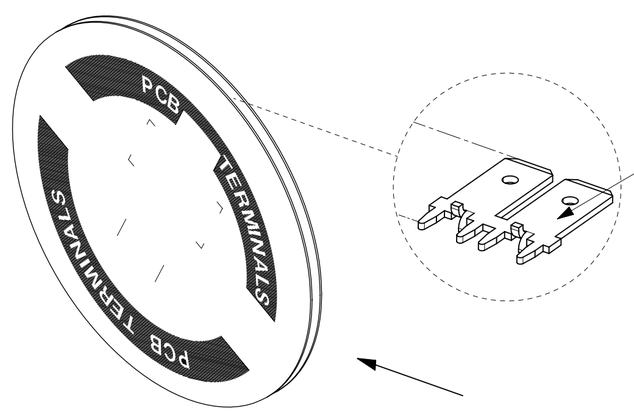

NOTES:
1. BARE EDGES PERMISSIBLE AT CARRIER CUT OFF.
2. MATERIAL: BRASS C26000 (.032/0.81) THICK.
3. TAB CONFORMS TO NEMA SPECIFICATIONS.
4. ALL DIMENSIONS AND NOTES REFERENCE UNLESS OTHERWISE NOTED.
5. PLATING: MATTE TIN OVER NICKEL 150µ IN/3.81 µ mm MINIMUM THICKNESS OVER NICKEL 50µ IN/1.25µ mm MINIMUM THICKNESS.
6. REF: 5,000 MIN PARTS PER REEL, 24" DIAMETER REEL WITH 1.25" DIAMETER CENTER HOLE.
7. PART IS RoHS COMPLIANT
8. REDUCED PLATING THICKNESS PERMISSIBLE IN THIS AREA.

THIS DRAWING CONTAINS INFORMATION THAT IS PROPRIETARY TO MOLEX ELECTRONIC TECHNOLOGIES, LLC AND SHOULD NOT BE USED WITHOUT WRITTEN PERMISSION

DIMENSION UNITS	SCALE
INCH/MM	5:1

GENERAL TOLERANCES (UNLESS SPECIFIED)

	MM	INCH
4 PLACES	±	±
3 PLACES	±	± 0.005
2 PLACES	± 0.13	± 0.01
1 PLACE	± 0.25	±
0 PLACES	±	±
ANGULAR TOL	± 0.5 °	

DRAFT WHERE APPLICABLE MUST REMAIN WITHIN DIMENSIONS

CURRENT REV DESC: REMOVED TOL +/-.003

EC NO:	767733	
DRWN:	DEANNM1	2023/11/01
CHK'D:	ETHRODAHL	2023/11/02
APPR:	ETHRODAHL	2023/11/02

INITIAL REVISION:

DRWN:	EDB	11/08/96
APPR:	RWD	11/08/96

THIRD ANGLE PROJECTION | DRAWING: C-SIZE | SERIES: 19705

molex

QUICK DISCONNECT
PCB MOUNTABLE .250 & .187 X .032 TAB

PRODUCT CUSTOMER DRAWING

DOCUMENT NUMBER	DOC TYPE	DOC PART	REVISION
SD-19705-400	PSD	001	M2

MATERIAL NUMBER	CUSTOMER	SHEET NUMBER
SEE TABLE	GENERAL MARKET	1 OF 1

DOCUMENT STATUS	P1	RELEASE DATE	2023/11/02 14:13:59

FORMAT: Eng-lega-master-tb-prod-C
REVISION: E1
DATE: 2021/05/01